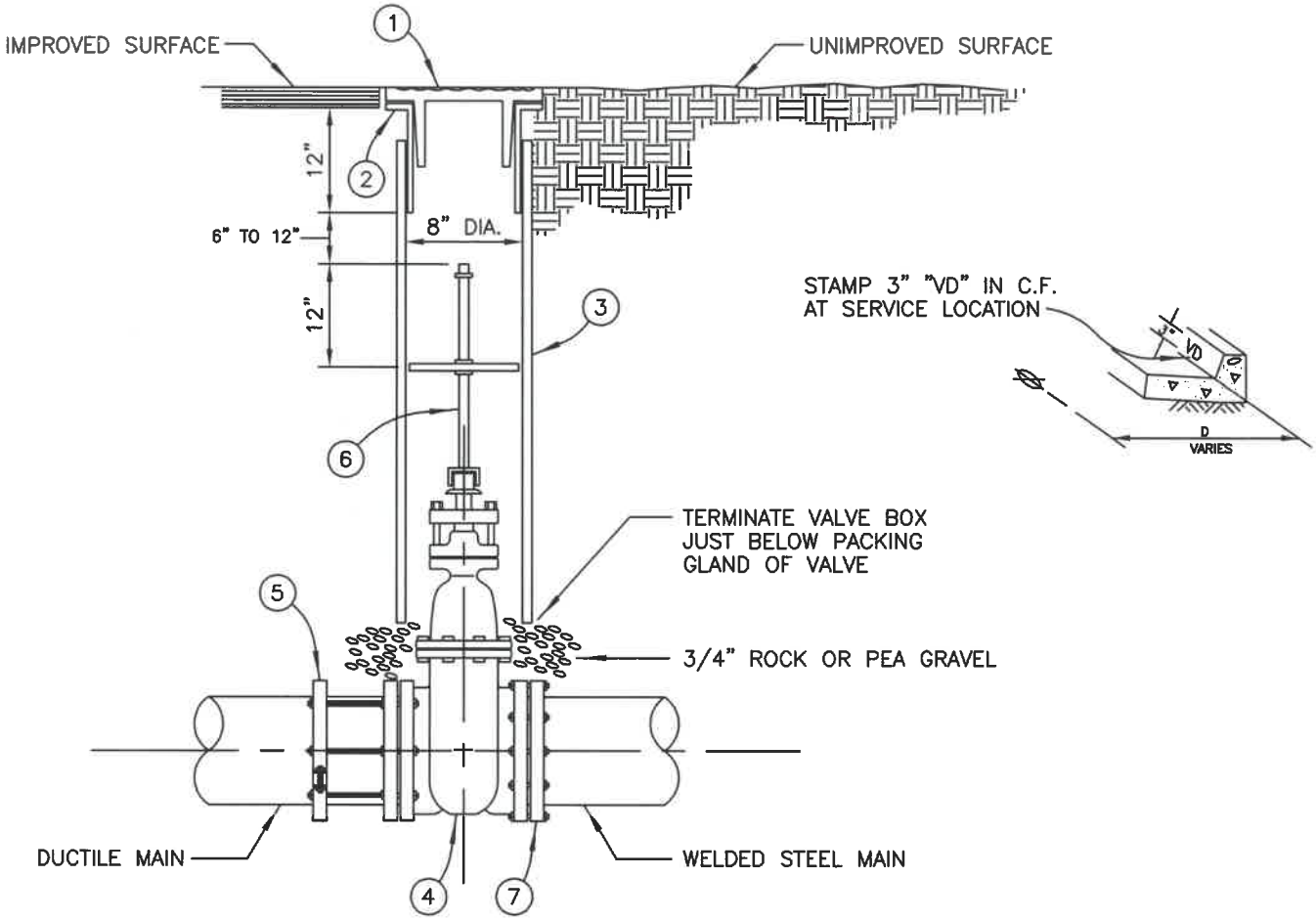

NOTES

1. VALVE OPERATOR EXTENSION IS REQUIRED WHEN DEPTH TO VALVE OPERATOR EXCEEDS 5'. VALVE OPERATOR EXTENSION SHALL BE 18"–24" FROM FINISH SURFACE.
2. CONTRACTOR SHALL STAMP A 3" TALL "V" AND THE DISTANCE "D" FROM THE CURB FACE TO THE CENTER OF THE VALVE CAN.
3. SEE STANDARD DRAWING ARC. – FOR THRUST BLOCK REQUIREMENTS.

ITEM	DESCRIPTION	PART NO.
1	8" VALVE COVER STAMPED WATER AS SPECIFIED, CAST IRON. PAINTED BLUE	USE BROOKE 3–RT 10" DIA. x 12" TRAFFIC VALVE BOX WHEN FINISH SURFACE IS PCC △1
2	8" DIAMETER, 14 GAUGE, 18" LENGTH MIN. SLIP CAN, GALVANIZED	
3	8" SCH. 80, PVC VALVE BOX	–
4	FLANGED OR MECHANICAL JOINT RESILIENT–SEATED GATE VALVE WITH 2" OPERATING NUT	–
5	THRUST RESTRAINT	–
6	VALVE OPERATOR EXTENSION, SEE STANDARD DRAWING ARC. – FOR INSTALLATIONS 5'–0" OR DEEPER	–
7	HEX HEAD BOLTS	

CITY OF ARCADIA CALIFORNIA Incorporated August 5, 1903 Community of Homes

PUBLIC WORKS SERVICES

GATE VALVE INSTALLATION

REVISIONS:	DATE	REVISIONS:	DATE
△1	3/29/11	△3	
△2		△4	

SCALE: NOT TO SCALE

APPROVED: Jim Tait 4/9/11
CITY OF ARCADIA–PUBLIC WORKS SERVICES DIRECTOR DATE

APPROVED: 38971 4/05/11
CITY OF ARCADIA – CITY ENGINEER RCE No. DATE

STANDARD PLAN NUMBER

717

SHEET 1 OF 1